Simple Voltmeter Monitors TTL Supplies

National Semiconductor
Linear Brief 48
Michael Maida
February 1980

Using a National Semiconductor LM3914 bar/dot display driver chip, a few resistors and some LEDs, a simple expanded-scale voltmeter is easily constructed. Furthermore, it runs from the same single 5V ± 10% supply it monitors and can provide TTL-compatible undervoltage and overvoltage warning signals.

The complete circuit is shown in *Figure 1*. Resistors R1 and R2 attenuate V_{CC} by a factor of three at the LM3914 signal input, ensuring proper biasing of the IC with V_{CC} as low as 4V. The IC's internal reference sets the voltage across the series combination of R3, R4 and R5 at 1.25V, establishing a reference load current of about 1 mA. This current is joined by the small, constant current from the reference adjust pin (75 μA, typ) and flows to ground through R6 and R7, developing a voltage drop. Adjusting R6 varies this voltage drop and, consequently, the voltage at pin 7, nominally 1.803V (= 5.41V/3).

Pin 7 is connected to the top of the LM3914's internal ten-step voltage divider (pin 6). The bottom of this divider (pin 4) is connected to the center tap of potentiometer R4. By varying the pot setting this voltage can be set to 1.47V (= 4.41V/3) without significantly affecting the potential at pin 7. The optional diode D1 protects against damaging the IC by connecting the leads backwards.

In operation, the LM3914's ten internal voltage comparators compare the signal input, $V_{CC}/3$, to the reference voltage on the divider, lighting each successive LED for every 100 mV increase in V_{CC} above 4.5V as shown. The LM3914 regulates the LED currents at 10 times the reference load current, here about 10 mA, so external current-limiting resistors are not required. With pin 9 left open circuit, the LM3914 functions in Dot mode (only one LED on at a time). If desired, a Bar mode display could be obtained by connecting pin 9 to V_{CC}, but the dot display seems more suitable in this application.

To calibrate, set V_{CC} at 5.41V and adjust R6 until LED #9 and LED #10 are equally illuminated. (A built-in overlap of about 1 mV ensures all LEDs won't go out at a threshold point.) There's no need to vary the system supply voltage to perform this adjustment. Instead, disconnect R1 from V_{CC} and connect it to an accurate reference. Then, at 4.5V, adjust R4 until LED #1 just barely turns on. There is a slight interaction caused by the finite resistance (10k, typ) of the LM3914's voltage divider, so that repeating the above procedure once is advised.

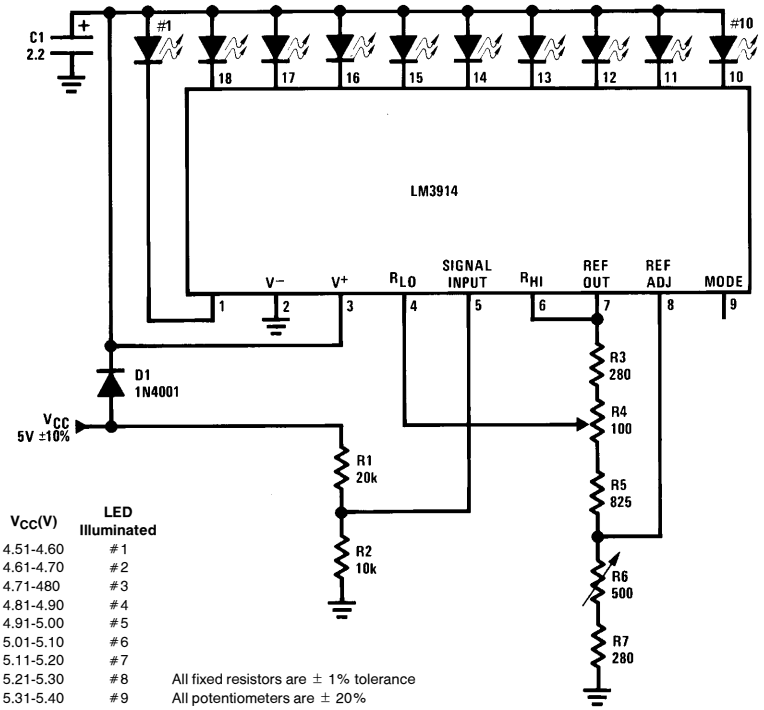

V_{CC}(V)	LED Illuminated
4.51-4.60	#1
4.61-4.70	#2
4.71-480	#3
4.81-4.90	#4
4.91-5.00	#5
5.01-5.10	#6
5.11-5.20	#7
5.21-5.30	#8
5.31-5.40	#9
5.41-up	#10

All fixed resistors are ± 1% tolerance
All potentiometers are ± 20%
C1: 2.2 μF tantalum or 10 μF aluminum electrolytic

TL/H/8496–1

FIGURE 1. 5V Power Supply Monitor

©1995 National Semiconductor Corporation TL/H/8496

RRD-B30M115/Printed in U. S. A.

The LED driver outputs can directly drive a TTL gate, so that the LED #1 and LED #10 outputs may be used for undervoltage and overvoltage warning signals. These may be used to initiate a soft shutdown or summon an operator, for example. The interfacing circuitry is shown in *Figure 2*. The 470Ω resistor R8 ensures that the LM3914 output will saturate to provide the proper TTL low level. Pull-up resistor R9 provides the logic high level.

In the previous circuit the undervoltage LED goes out when V_{CC} is less than 4.51V, a deficiency that is corrected here, Transistors Q1 and Q2 shut off LED #1 whenever any other LED is turned on by the LM3914. Q2's output will directly drive TTL.

Calibration procedure is the same as before. The LM3914 output thresholds have been shifted up by 100 mV and output #10 is or-tied with output #9. Other outputs may be wire-or'd together if 100 mV resolution is not necessary. If desired, the outputs can be color coded by making LED #1 and LED #10 red, LED #2 and LED #9 amber, and the rest of the LEDs green to ease interpretation.

This circuit is useful where quick and easy voltage adjustments must be made, such as in the field or on the production line. The circuit's low cost makes it feasible to incorporate it into the system, where the overvoltage and undervoltage warning signals provide an attractive extra. Of course, these techniques can be used to monitor any higher voltages, positive or negative.

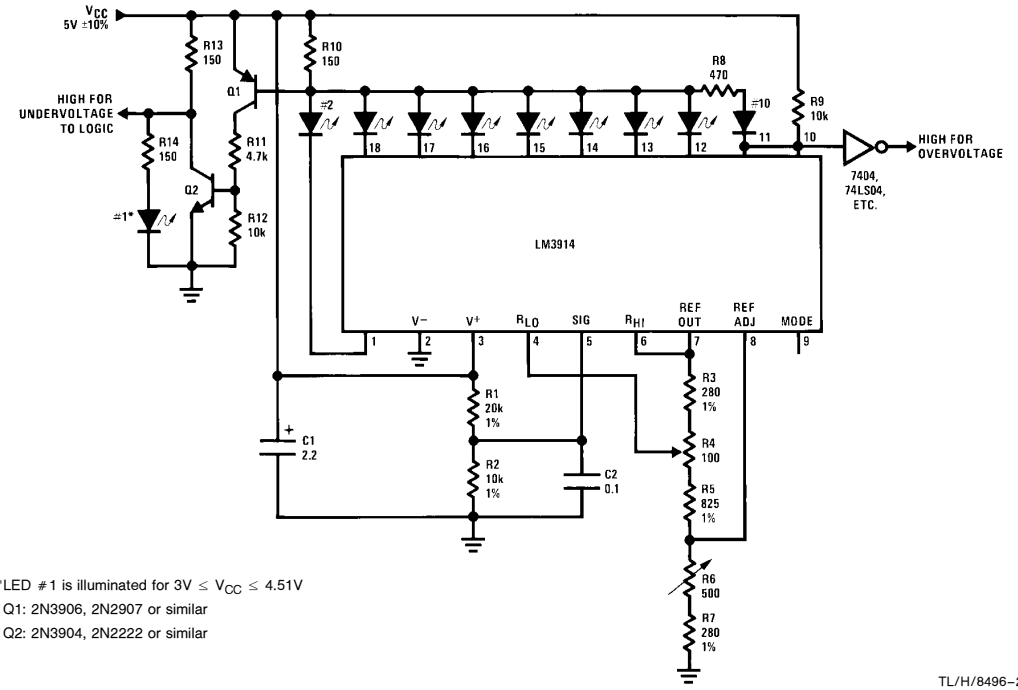

*LED #1 is illuminated for 3V ≤ V_{CC} ≤ 4.51V

Q1: 2N3906, 2N2907 or similar

Q2: 2N3904, 2N2222 or similar

TL/H/8496–2

FIGURE 2. Power Supply Monitor with TTL Interface and Extended Undervoltage Range

LIFE SUPPORT POLICY

NATIONAL'S PRODUCTS ARE NOT AUTHORIZED FOR USE AS CRITICAL COMPONENTS IN LIFE SUPPORT DEVICES OR SYSTEMS WITHOUT THE EXPRESS WRITTEN APPROVAL OF THE PRESIDENT OF NATIONAL SEMICONDUCTOR CORPORATION. As used herein:

1. Life support devices or systems are devices or systems which, (a) are intended for surgical implant into the body, or (b) support or sustain life, and whose failure to perform, when properly used in accordance with instructions for use provided in the labeling, can be reasonably expected to result in a significant injury to the user.
2. A critical component is any component of a life support device or system whose failure to perform can be reasonably expected to cause the failure of the life support device or system, or to affect its safety or effectiveness.

National Semiconductor Corporation
1111 West Bardin Road
Arlington, TX 76017
Tel: 1(800) 272-9959
Fax: 1(800) 737-7018

National Semiconductor Europe
Fax: (+49) 0-180-530 85 86
Email: cnjwge@tevm2.nsc.com
Deutsch Tel: (+49) 0-180-530 85 85
English Tel: (+49) 0-180-532 78 32
Français Tel: (+49) 0-180-532 93 58
Italiano Tel: (+49) 0-180-534 16 80

National Semiconductor Hong Kong Ltd.
13th Floor, Straight Block,
Ocean Centre, 5 Canton Rd.
Tsimshatsui, Kowloon
Hong Kong
Tel: (852) 2737-1600
Fax: (852) 2736-9960

National Semiconductor Japan Ltd.
Tel: 81-043-299-2309
Fax: 81-043-299-2408

National does not assume any responsibility for use of any circuitry described, no circuit patent licenses are implied and National reserves the right at any time without notice to change said circuitry and specifications.